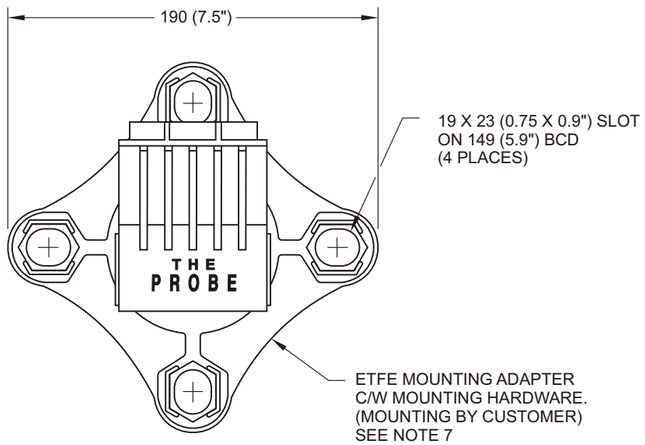

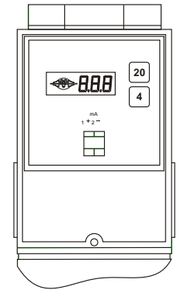

VIEW "A-A"

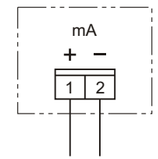

POWER SUPPLY
12 TO 30 VOLTS DC,
POWER SUPPLY INPUT IS
REVERSE POLARITY PROTECTED.
SEE NOTES 6 AND 7

NOTE:

1) THE ENCLOSURE RATING FOR THE PROBE IS CSA TYPE 4, IP 65, AND NEMA 4. THE NON-METALLIC ENCLOSURE DOES NOT PROVIDE BONDING BETWEEN CONDUIT CONNECTORS. THE USE OF APPROVED WATERTIGHT CONDUIT HUBS/GLANDS IS REQUIRED FOR CSA TYPE 4, IP 65 AND NEMA 4 (OUTDOOR) APPLICATIONS.

2) THE OPERATING TEMPERATURE RANGE FOR THE PROBE IS: -40°C TO 60°C (-40°F TO 140°F) FOR CONTINUOUS USE WHEN USED IN CONJUNCTION WITH A 3" UNIVERSAL MOUNTING ADAPTER.

3) PROBE WEIGHT = 1.5 KG (3.3 LB).

4) LOCATE THE PROBE PERPENDICULAR TO THE LIQUID SURFACE SO THAT IT WILL HAVE A CLEAR SOUND PATH. THE PROBE'S SOUND PATH SHOULD NOT INTERSECT THE FILL PATH, ROUGH WALLS, SEAMS, RUNGS, ETC.

5) MOUNT THE PROBE SO THAT THE RADIATING SURFACE OF THE TRANSDUCER IS AT LEAST 25cm (10") ABOVE THE HIGHEST ANTICIPATED LEVEL.

6) WIRING MUST BE DONE IN ACCORDANCE WITH ALL GOVERNING REGULATIONS.

7) THE MOUNTING ADAPTER WILL MOUNT TO A 3" ANSI, DIN65 PN10 OR JIS10K3B FLANGE. HAND TIGHTEN BOLTS.

8) FOR COMPLETE INSTALLATION AND WIRING INFORMATION REFER TO THE PROBE INSTRUCTION MANUAL OR CONTACT YOUR SIEMENS REPRESENTATIVE.

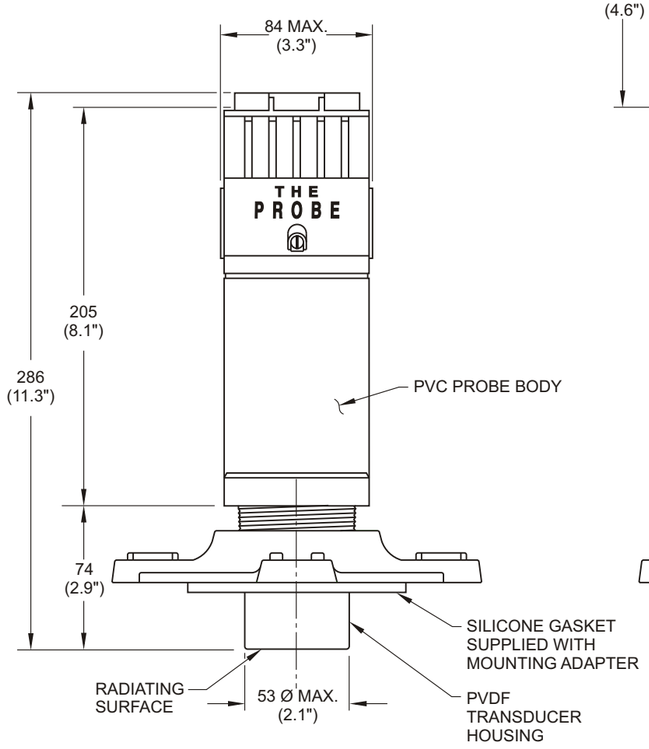

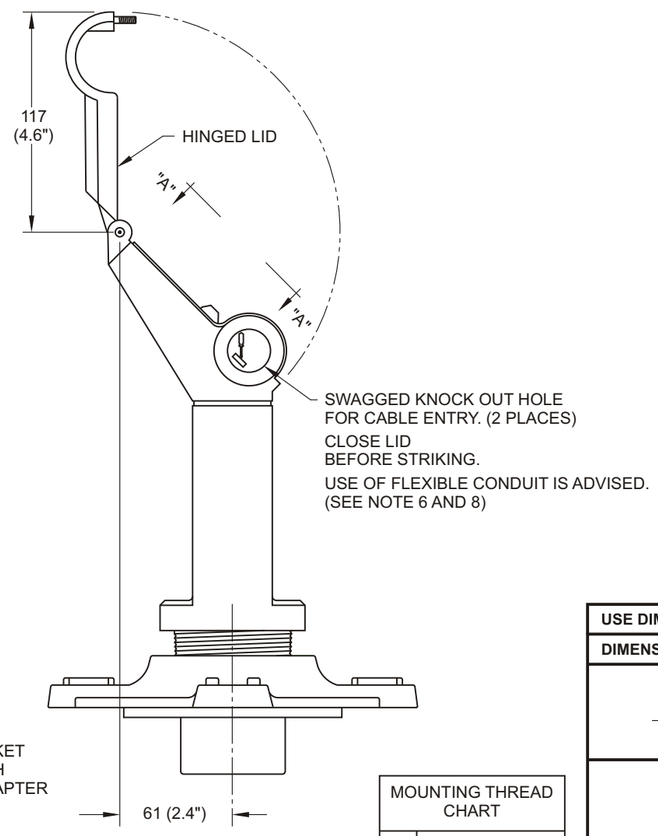

MOUNTING THREAD CHART	
	R 2" BSPT
	2" NPT
	G 2" BSPP

Rev.	Revision / ECN Description	Drawn	Appr.	Date
4	REVISED DRAWING LAYOUT PER EC 79C51033	PJF	MC	MAY 13/2010
3	REMOVE MILLTRONICS LOGO PER ECN 2004-0329	RPC	SM	MARCH 08/2005
0	REPLACES DWG. 0-8600002Z-SI-B	BG	DF	OCT 31/1994

USE DIMENSIONS ONLY - DO NOT SCALE

DIMENSIONS ARE IN MILLIMETERS

Third Angle Projection

Product Group: ULTRASONICS
Date: 31/OCT/94
Drawn: B.GRAY
Checked: A.CARLSON
Approved: D.FREEMAN
Location: PETERBOROUGH

Tolerance Unless Otherwise Noted: UOS
1 Place Decimal ± 0.03
2 Place Decimal ± 0.01
3 Place Decimal ± 0.002
Angles: ± 0.5°

Scale: NTS
Size: B

TITLE: THE PROBE, LOOP POWER I.S. C/W 3" UNIVERSAL MOUNTING ADAPTER OUTLINE AND CONNECTION DIAGRAM

SIEMENS MILLTRONICS PROCESS INSTRUMENTS INC.
Peterborough, Ontario, Canada

DRAWING No: 23650612
Rev. 4

File No. 2365061204
Plot at: 1 : 1
Sheet 1 Of 1