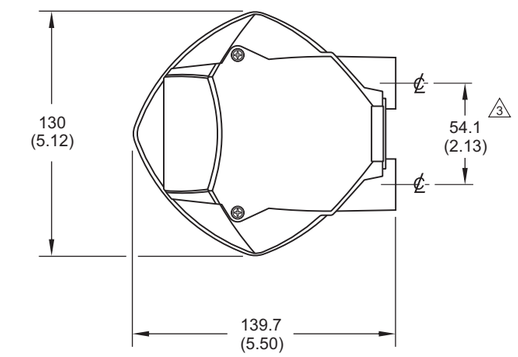

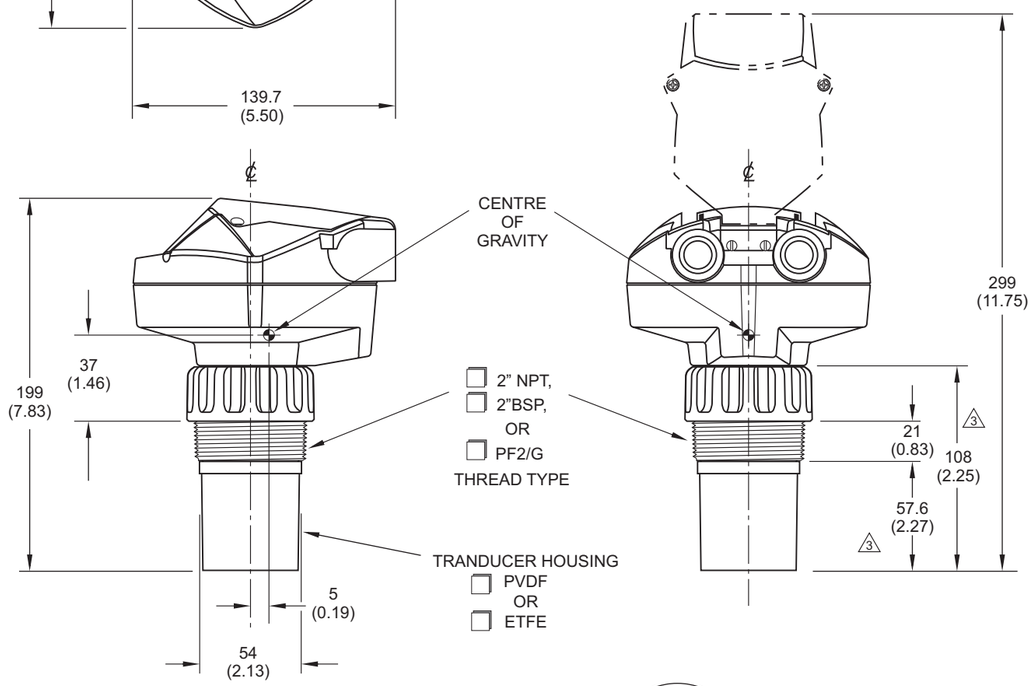

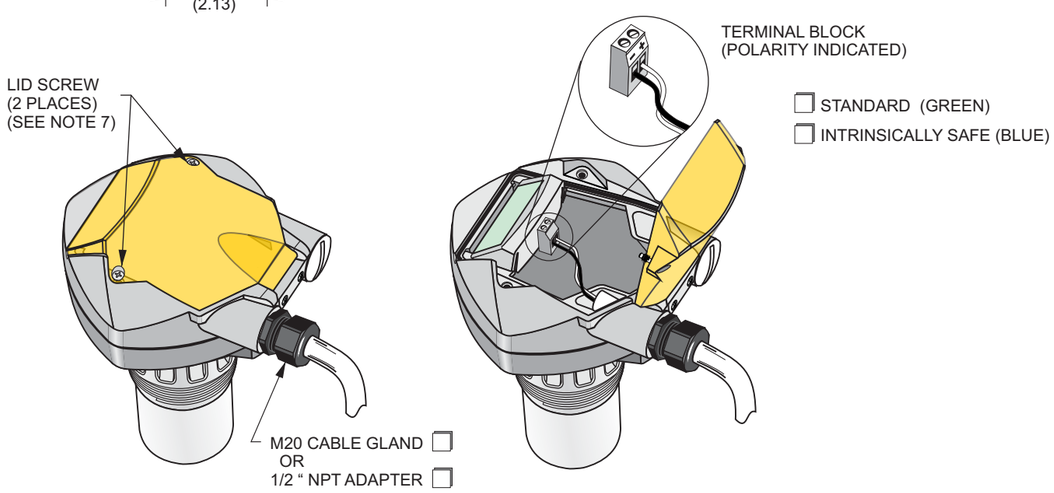

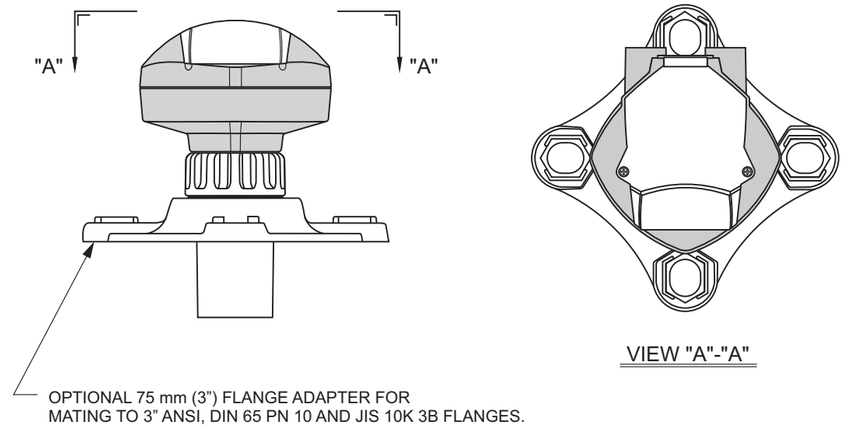

DC TERMINALS SHALL BE SUPPLIED FROM AN SELV SOURCE IN ACCORDANCE WITH IEC-1010-1 ANNEX H
ALL FIELD WIRING MUST HAVE INSULATION SUITABLE FOR RATED VOLTAGES.

NOTE:

1) DIMENSIONS ARE IN mm ( ) DENOTES DIMENSIONS IN INCHES.
2) INSTALLATION TO BE PERFORMED BY QUALIFIED PERSONNEL IN ACCORDANCE WITH LOCAL GOVERNING REGULATIONS.
3) NON-METALIC ENCLOSURE DOES NOT PROVIDE A CONTINUOUS GROUND PATH BETWEEN CONDUIT CONNECTIONS. USE GROUNDING TYPE BUSHINGS AND JUMPERS.
4) USE SHIELDED TWISTED PAIR CABLE (WIRE GAUGE AWG 14 TO 22).
5) FOR INTRINSICALLY SAFE INSTALLATIONS, REFER TO SIEMENS DRAWINGS 23650516 OR 23650517 AND THE INSTRUCTION MANUAL.
6) USE ONLY APPROVED WATER TIGHT CONDUIT HUBS/GLANDS TO MAINTAIN ENCLOSURE RATING.
7) CAUTION: DO NOT OVERTIGHTEN LID SCREWS. (RECOMMENDED TORQUE IS 1.1 1.7 N-m (10 TO 15 IN-LB)
8) AMBIENT TEMPERATURE RANGE: – 40 TO 80°C (– 40 TO 176°F)
   PROCESS TEMPERATURE RANGE: – 40 TO 85°C (– 40 TO 185°F)
9) IDEALLY THE FACE OF THE TRANSDUCER SHALL BE 305 mm (1 FT.) ABOVE THE HIGHEST ANTICIPATED LEVEL.
10) LOCATE THE SITRANS PROBE LU, a) PERPENDICULAR TO THE MONITORED SURFACE
    b) CLEAR OF ROUGH WALLS, SEAMS, RUNGS OR OTHER OBSTRUCTIONS
    c) CLEAR OF FILL PATH
11) SITRANS PROBE LU WEIGHT: 2.1KG (4.6 lbs)

Rev.	Revision / ECN Description	Drawn	Appr.	Date
3	REVISED DIMENSIONS PER CO P5A00172582	PJF	MC	MAY 18/2016
2	WEIGHT ADDED. REVISED PER CO P5A00124366	PJF	SM	MAY 11/2015
0	FOR CONSTRUCTION	RPC	SM	MAY 26/04

USE DIMENSIONS ONLY - DO NOT SCALE

DIMENSIONS ARE IN MILLIMETERS

Third Angle Projection

Product Group: ULTRASONICS
Date: 26 / MAY / 2004
Drawn: R. CLYSDALE
Checked: R. VASS
Approved: S. MILLIGAN
Location: PETERBOROUGH

Tolerance Unless Otherwise Noted: UOS
0 PLC DECIMAL ± 0.8
1 PLC DECIMAL ± 0.3
2 PLC DECIMAL ± 0.10
Angles: ± 0.5°

Scale: NTS
Size: B

TITLE:
SITRANS PROBE LU (C/W OPTIONS)
OUTLINE & CONNECTION DIAGRAM

-RESTRICTED-

SIEMENS MILLTRONICS PROCESS INSTRUMENTS INC.
Peterborough, Ontario, Canada

DRAWING No: 23650558
Rev. 3

File No. 2365055802
Plot at: 1 : 1
Sheet 1 Of 1