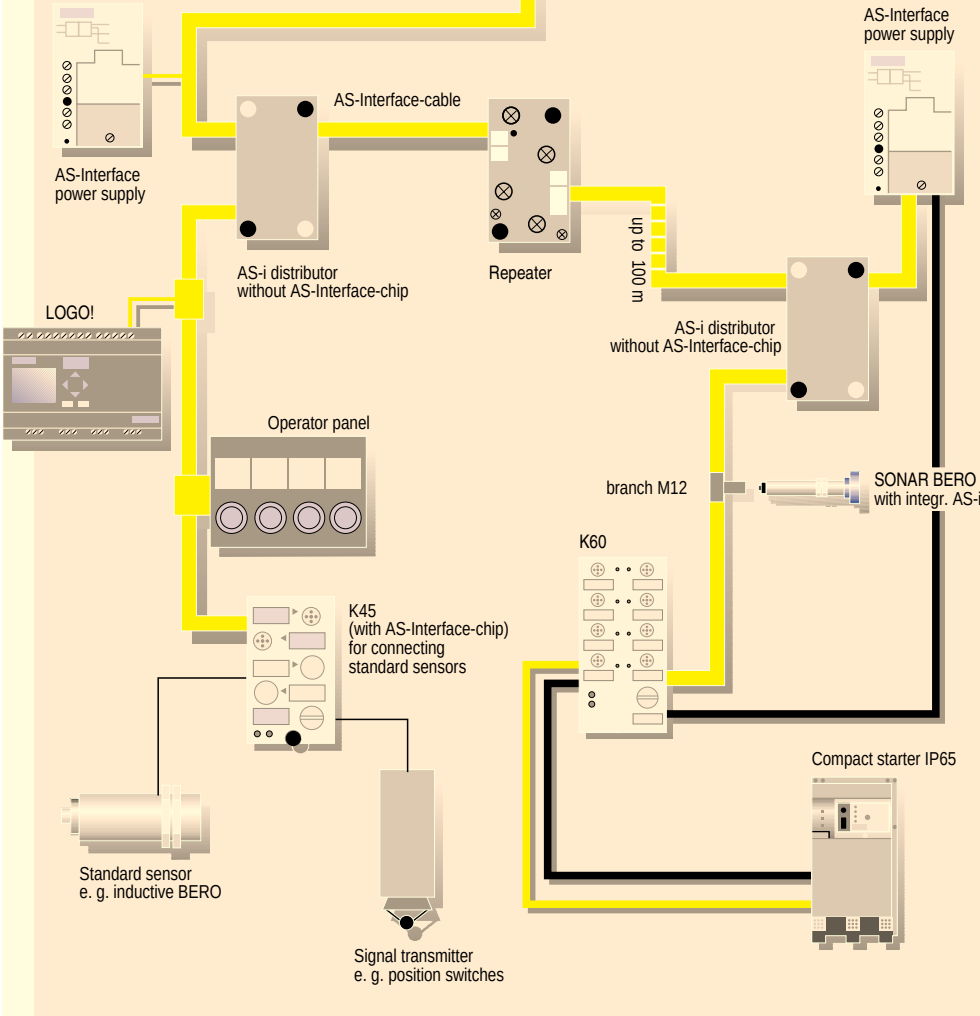Connecting with AS-Interface-cable